ECO NO.	DATE	REV.	REVISION RECORD	AUTH.	DR.BY
5784	7-26-2004	A	ALTERNATOR 12V 50A WAS P/N 39139		GA
6601	2-11-2009	B	ADD MODEL 170-T6A		GA
6853	1-5-2012	C	HEAT EXCHANGER WAS 44792		GA

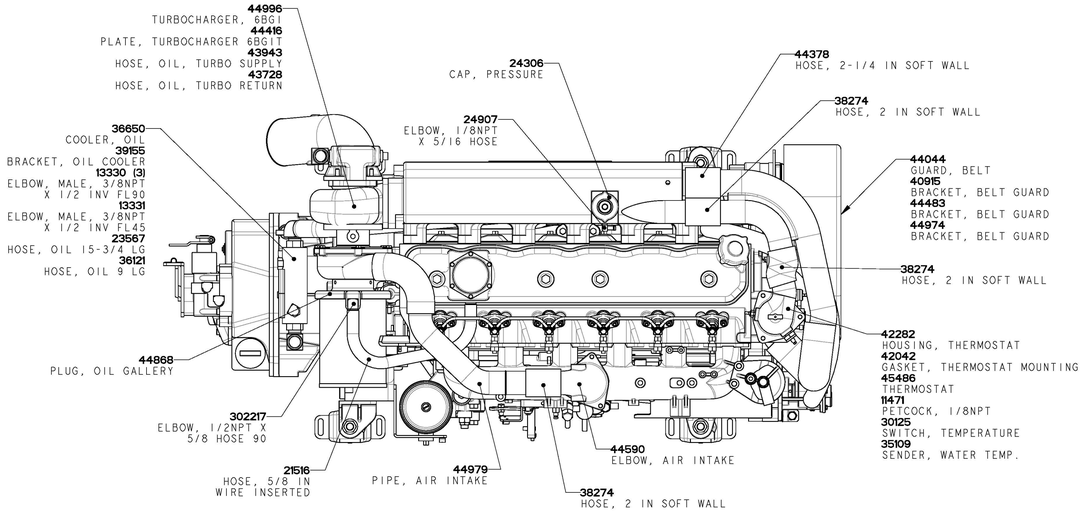

			FAST MOVING PARTS		
49605	(B) ALTERNATOR, 12V 50A	**36192**	HOURMETER, 12V	**48181**	SPARE PARTS KIT A
38530	ALTERNATOR, 24V 42A	**42159**	HOURMETER, 24V	**48182**	SPARE PARTS KIT B-NATURALLY ASP.
44044	BELT, GUARD	**48183**	INJECTOR - NATURALLY ASP.	**48186**	SPARE PARTS KIT B-TURBOCHARGED
44385	BELT, WATER PUMP-ALTERNATOR	**48185**	INJECTOR - TURBOCHARGED	**303007**	SOLENOID, FUEL CONTROL 12V
24306	CAP, PRESSURE	**40513**	ISOLATORS	**39746**	SOLENOID, FUEL CONTROL 24V
20946	CIRCUIT BREAKER, 10A 24VDC	**45139**	MANUAL, OPERATOR	**45561**	SOLENOID, FUEL STOP 12V
36563	CIRCUIT BREAKER, 10A 12VDC	**36650**	OIL COOLER	**45562**	SOLENOID, FUEL STOP 24V
24683	CIRCUIT BREAKER, 20A 12VDC	**35110**	OIL PRESSURE METER 12V	**24639**	SOLENOID, PREHEAT 12V
43577	DIPSTICK	**42157**	OIL PRESSURE METER 24V	**22249**	SOLENOID, PREHEAT 24V
33259	EMERGENCY STOP SWITCH	**24132**	OIL PRESSURE SENDER 12V	**43472**	STARTER MOTOR 12V
32923	EXHAUST TEMPERATURE SWITCH	**42161**	OIL PRESSURE SENDER 24V	**39417**	STARTER MOTOR 24V
43930	FILTER, AIR	**37323**	OIL PRESSURE SWITCH 5#	**24732**	SWITCH, PREHEAT & START
46146	FILTER, FUEL OIL	**11552**	OIL PRESSURE SWITCH 10#	**24731**	SWITCH, STOP
44998	FILTER, LUBE OIL	**13758**	PAINT, RED AEROSOL	**39826**	TACHOMETER, ADMIRAL PANEL
33769	FUSE, 8 AMP	**42307**	PAINT, WHITE AEROSOL	**24977**	TANK, COOLANT RECOVERY
48180	GASKET SET, COMPLETE	**36842**	PANEL KIT, ADMIRAL 12V	**45486**	THERMOSTAT
48179	GASKET SET, UPPER	**46637**	PANEL KIT, ADMIRAL 24V	**42042**	THERMOSTAT MOUNTING GASKET
47348	GASKET, HEAD	**36539**	PANEL, GENSET CONTROL 12V	**47349**	VALVE COVER GASKET
45445	GASKET, OIL PAN	**42162**	PANEL, GENSET CONTROL 24V	**42336**	VOLTAGE REGULATOR
48130	GLOWPLUG, 12V	**44336**	PANEL, REMOTE START/STOP 15 PIN	**35111**	VOLTMETER 12V
45124	GLOWPLUG, 24V	**47350**	PUMP, FRESH WATER	**42156**	VOLTMETER 24V
36557	HARNESS 15 FT. EXT 4 PIN	**47323**	PUMP, IMPELLER KIT	**44495**	WATER INJ. EXHAUS ELBOW NAT. ASP.
30760	HARNESS 15 FT. EXT 8 PIN	**47352**	PUMP, MOUNTING GASKET	**44493**	WATER INJ. EXHAUST ELBOW TURBO
44799	HARNESS EXT 15 PIN, 15'-30'	**44183**	PUMP, MOUNTING O-RING	**35108**	WATER TEMPERATURE METER 12V
(C) **48515**	HEAT EXCHANGER	**47324**	PUMP, REPAIR KIT	**42158**	WATER TEMPERATURE METER 24V
42053	HEAT EXCHANGER END CAP	**43514**	PUMP, SEA WATER	**35109**	WATER TEMPERATURE SENDER
42054	HEAT EXCHANGER GASKET	**44998**	REMOTE LUBE OIL FILTER	**39550**	WATER TEMPERATURE SWITCH
44131	HEAT EXCHANGER O-RING			**44782**	WIRING HARNESS
47305	HOSE KIT, WATER			**11885**	ZINC
			ITEMS NOT SHOWN		
44643	HARNESS, GENSET 4-6BGI				

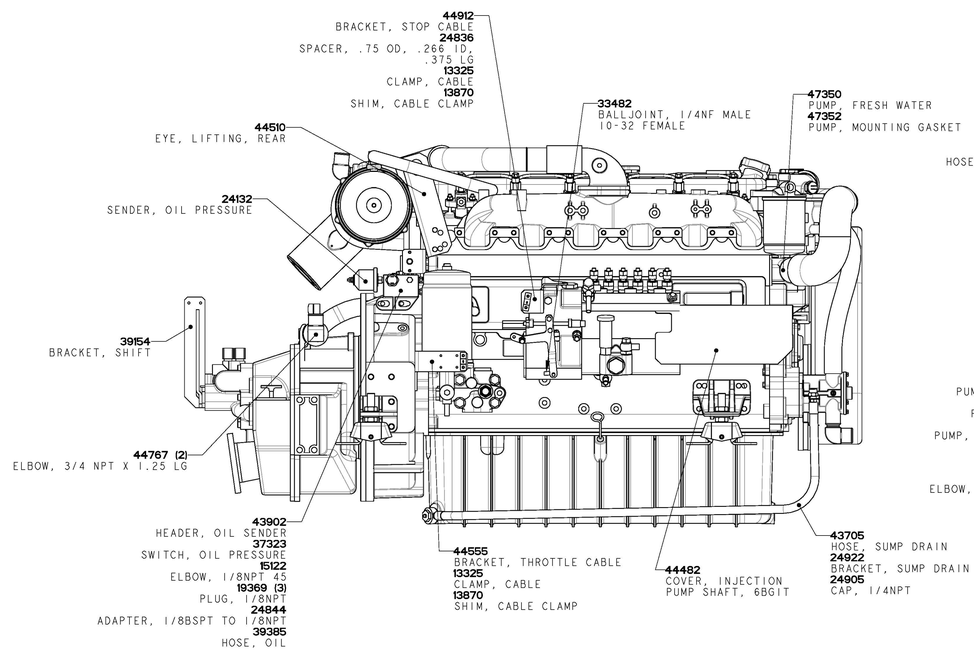

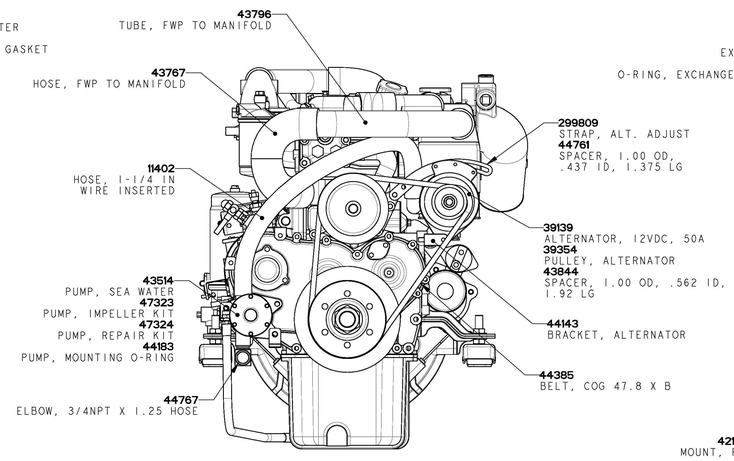

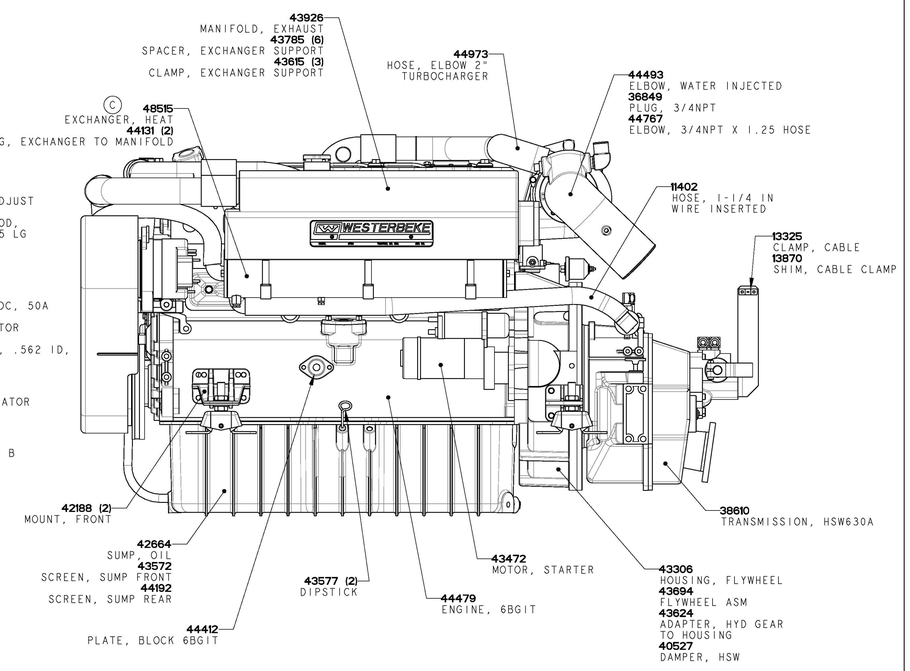

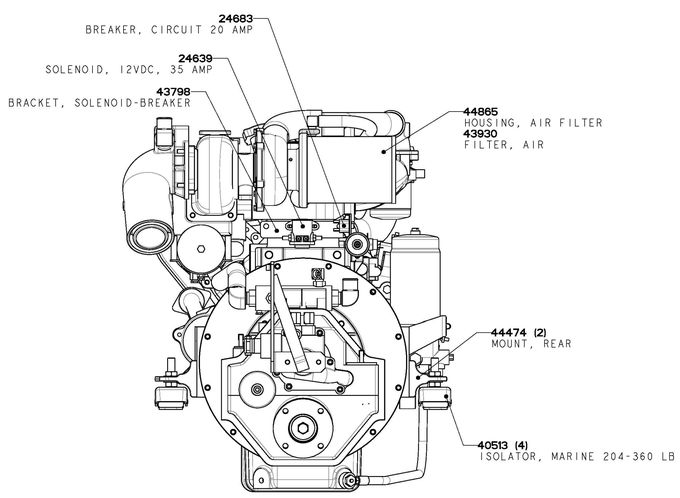

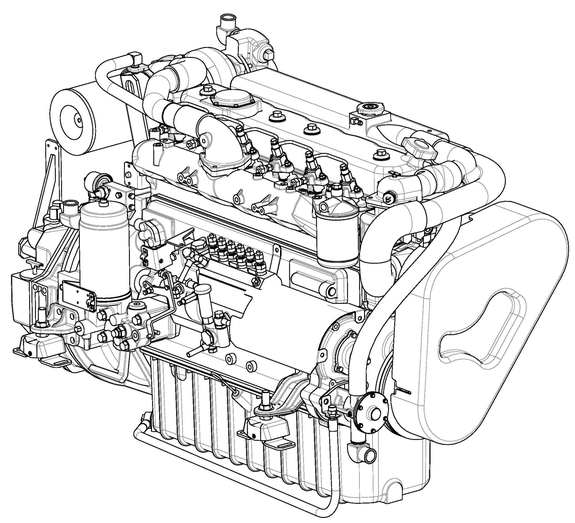

TOLERANCES (UNLESS OTHERWISE NOTED)	WESTERBEKE CORPORATION TAUNTON, MA. 02780		
INCHES .XX ±.02 .XXX ±.005 CAST ±.03 ANGLES: .5° FINISH 63 / MILLIMETERS .X ± 1.0 .X ± .5 .XX ± .13	TITLE PARTS LIST - 170-T6, 170-T6A		
	DRAWN BY BM	DATE 03/Jul/03	MATERIAL: --- --- ---
DIMENSIONS INCHES / MILLIMETERS (WHEN APPLICABLE)	APPROVED BY	DATE	
	SCALE 0.200	SIZE E	DRAWING NUMBER 48622	REV. C
	SHT. 1 of 1		